# HUIZHOU JINSANE ELECTRONICS CO.,LTD

## SOT-23 Encapsulate Adjustable Reference Source

# TL431

Adjustable Accurate Reference Source

**SOT-23**

1. REFERENCE

2. CATHODE

3. ANODE

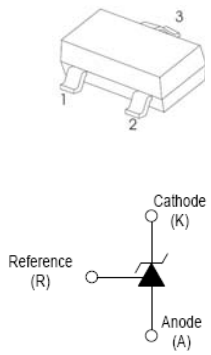


**DEVICE DESCRIPSION**

The TL431 is a three-terminal adjustable shunt regulator offering excellent temperature stability . This device has a typical dynamic output impedance of 0.2Ω. The device can be used as a replacement for zener diodes in many applications.

**FEATURES**

- The output voltage can be adjusted to 36V
- Low dynamic output impedance, its typical value is 0.2Ω
- Trapping current capability is 1 to 100mA
- Low output noise voltage
- Fast on -state response
- The effective temperature compensation in the working range of full temperature
- The typical value of the equivalent temperature factor in the whole temperature scope is 50 ppm/℃

**APPLICATION**

- Shunt Regulator
- High-Current Shunt Regulator
- Precision Current Limiter

**ABSOLUTE MAXIMUM RATINGS (Operating temperature range applies unless otherwise specified)**

| Parameter | Symbol | Value | Units |
|---|---|---|---|
| Cathode Voltage | $V_{KA}$ | 37 | V |
| Cathode Current Range (Continuous) | $I_{KA}$ | -100~+150 | mA |
| Reference Input Current Range | Iref | 0.05~+10 | mA |
| Power Dissipation | $P_D$ | 300 | mW |
| Operating temperature | Topr | -40~+85 | ℃ |
| Storage temperature Range | Tstg | -65~+150 | ℃ |

## ELECTRICAL CHARACTERISTICS ($T_a$=25℃ unless otherwise specified)

| Parameter | Symbol | Test conditions | | Min | Typ | Max | Unit |
|---|---|---|---|---|---|---|---|
| Reference Input Voltage (Fig.1) | $V_{ref}$ | $V_{KA}=V_{REF}$, $I_{KA}$=10mA | | 2.483 | 2.45 | 2.507 | V |
| Deviation of reference input Voltage Over temperature (note) (Fig.1) | $\triangle V_{ref}/\triangle T$ | $V_{KA}=V_{REF}$, $I_{KA}$=10mA $T_{min}\leq T_a\leq T_{max}$ | | | 4.5 | 17 | mV |
| Ratio Of Change in Reference Input Voltage to the change in Cathode Voltage (Fig.2) | $\triangle V_{ref}/\triangle V_{KA}$ | $I_{KA}$=10mA | $\triangle V_{KA}$ =10V~$V_{REF}$ | | -1.0 | -2.7 | mV/V |
| | | | $\triangle V_{KA}$ =36V~ 10V | | -0.5 | -2.0 | mV/V |
| Reference Input Current (Fig.2) | $I_{ref}$ | $I_{KA}$= 10mA,$R_1$=10 KΩ $R_2$=∞ | | | 1.5 | 4 | μA |
| Deviation Of Reference Input Current Over Full Temperature Range (Fig.2) | $\triangle I_{ref}/\triangle T$ | $I_{KA}$=10mA, $R_1$=10 KΩ $R_2$=∞ $T_a$=full Temperature | | | 0.4 | 1.2 | μA |
| Minimum cathode current for Regulation (Fig.1) | $I_{KA(min)}$ | $V_{KA}=V_{REF}$ | | | 0.45 | 1.0 | mA |
| Off-state cathode Current (Fig.3) | $I_{KA(OFF)}$ | $V_{KA}$=36V,$V_{REF}$=0 | | | 0.05 | 1.0 | μA |
| Dynamic Impedance | $Z_{KA}$ | $V_{KA}=V_{REF}$, $I_{KA}$=1 to 100mA f≤1.0KHz | | | 0.15 | 0.5 | Ω |

note: $T_{MIN}$=0℃ ,$T_{MAX}$=+70℃

**Figure 1. Test Circuit for $V_{KA}$ = $V_{ref}$**

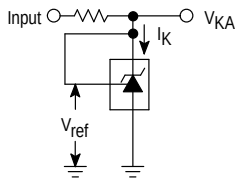


**Figure 2. Test Circuit for $V_{KA}$ > $V_{ref}$**

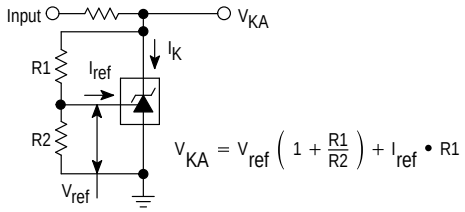


**Figure 3. Test Circuit for $I_{off}$**

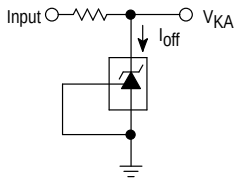

# Typical Characteristics

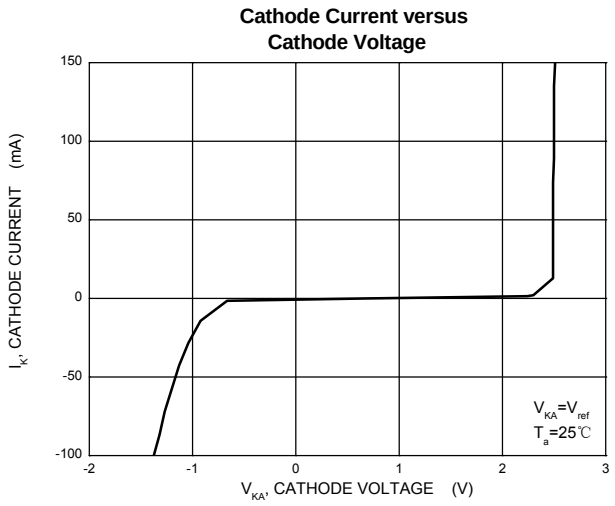


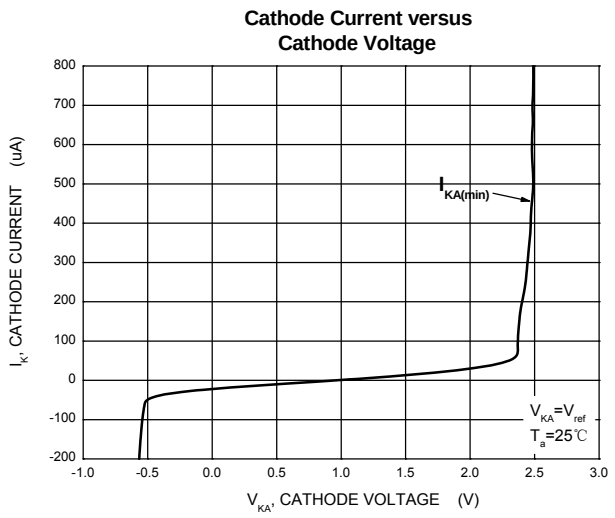


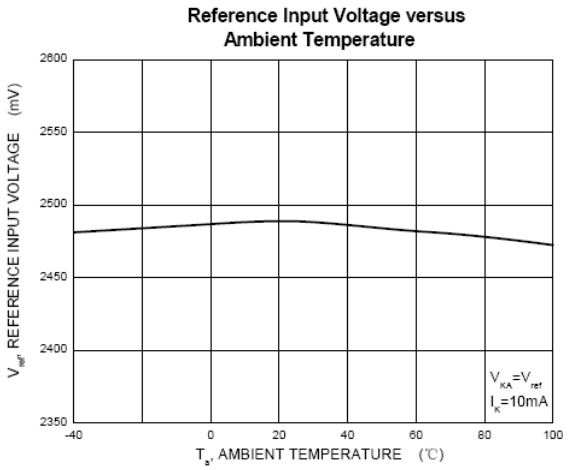


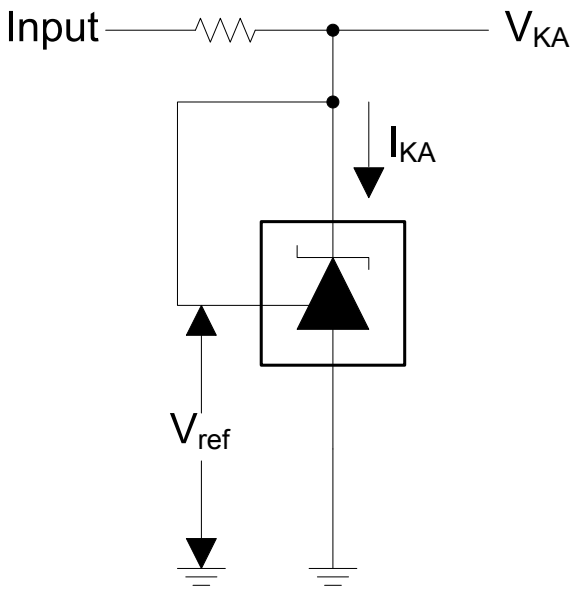


Test Circuit for $V_{KA}=V_{ref}$

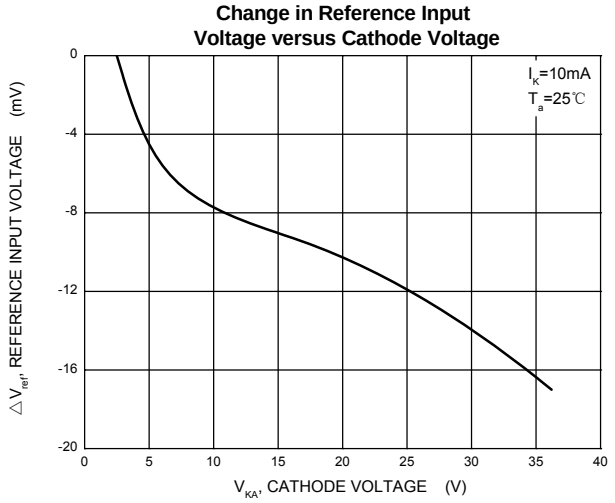


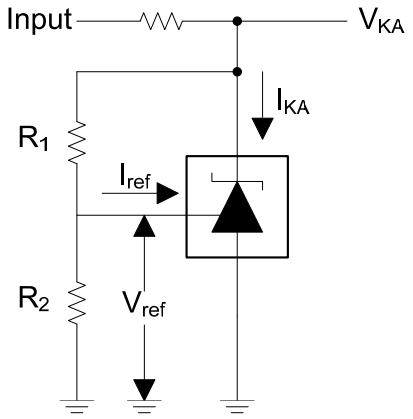


Test Circuit for $V_{KA}=V_{ref}(1+R1/R2)+R1*I_{ref}$

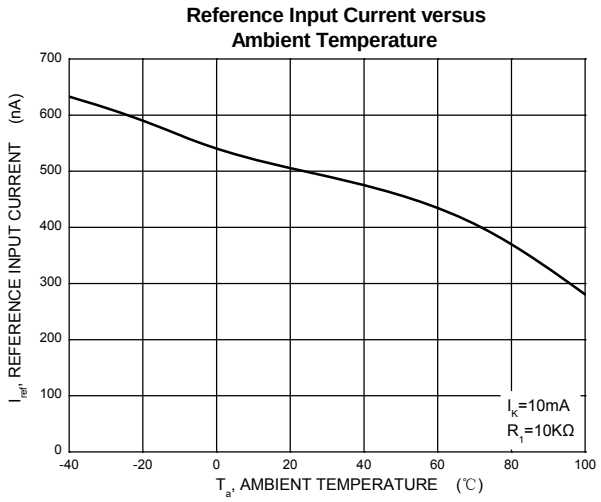


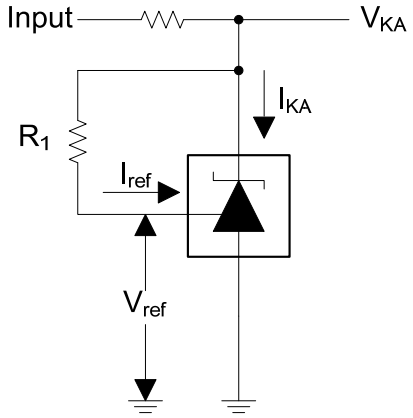


Test Circuit for $I_{ref}$

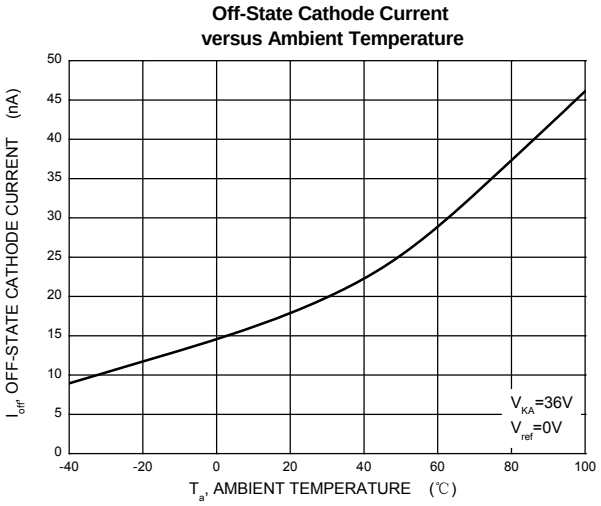


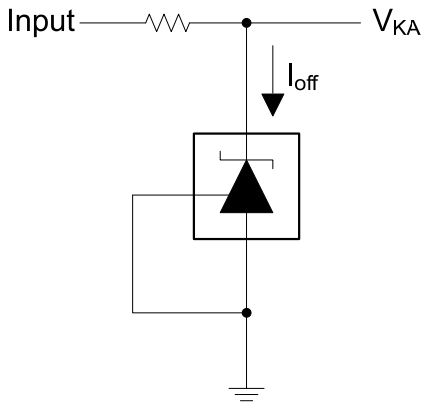


Test Circuit for $I_{off}$

## APPICATION INFORMATION

### 1. Shunt Regulator

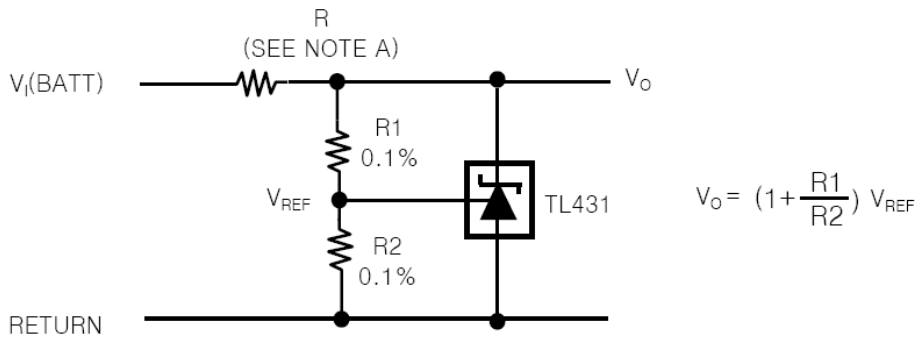


Note A : R Should provide cathode current 1mA to the TL431 at minimum $V_{I(BATT)}$

### 2. Output Control of a Three-Terminal Fixed Regulator

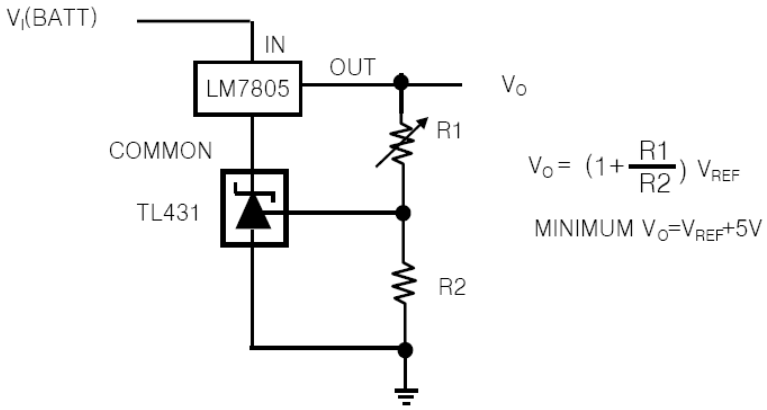


### 3. High-Current Shunt Regulator

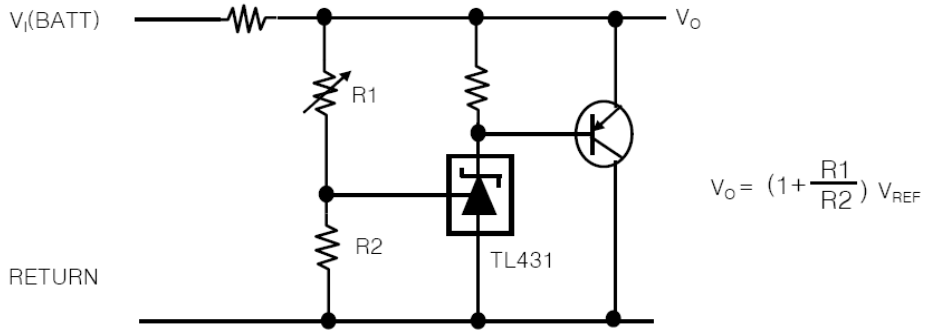

## 4. Efficient 5-V Precision Regulator

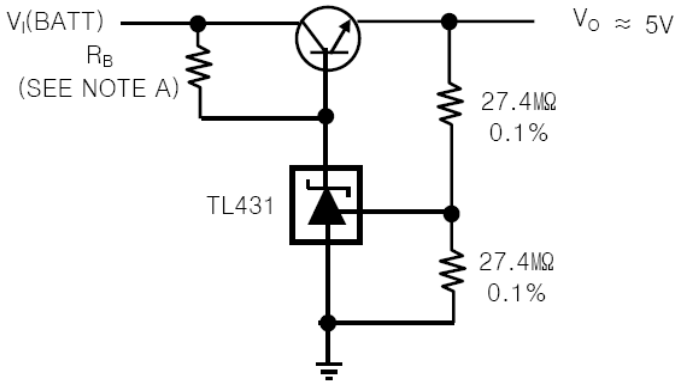


NOTE A : $R_B$ Should provide cathode current≥1mA to the TL431.

## 5. Precision Current Limiter

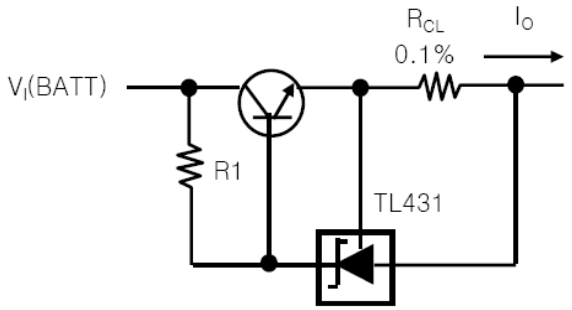


$$I_{OUT} = \frac{V_{REF}}{R_{CL}} + I_{KA}$$

$$R1 = \frac{V_{I(BATT)}}{\frac{I_O}{H_{FE}}} + I_{KA}$$

## 6. Precision Constant-Current Sink

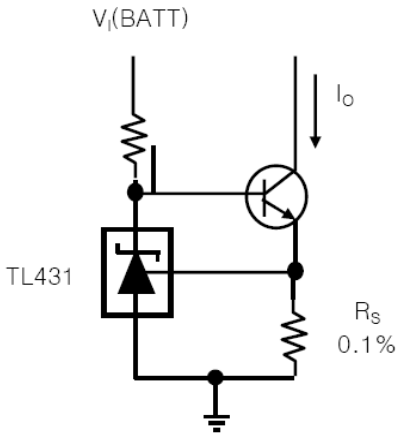


$$I_O = \frac{V_{REF}}{R_S}$$