HUIZHOU JINSANE ELECTRONICS CO., LTD

7809 Three-terminal positive voltage regulator

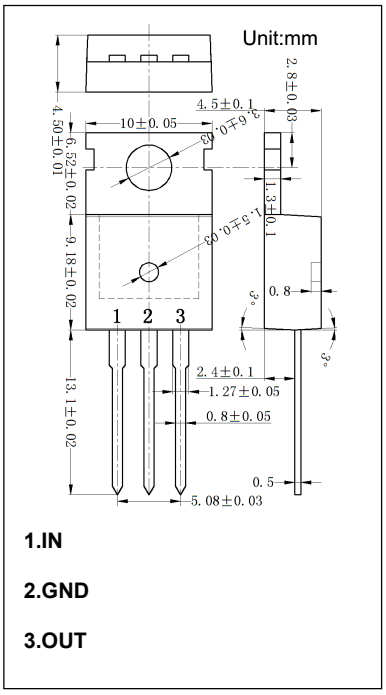

Features:

Maximum Output current I_{OM}: 1.2 A

Output voltage V_o: 9 V

Continuous total dissipation

P_D: 1.5W (T_a= 25°C)

15W (T_C=25°C)

Absolute Maximum Ratings (Operating temperature range applies unless otherwise specified)

Symbol	Parameter	Value	Unit
V_i	Input Voltage	35	V
T_{OPR}	Operating Junction Temperature Range	0 to +150	°C
T_{STG}	Storage Temperature Range	-55 to +150	°C
$R_{\theta JA}$	Thermal Resistance from Junction to Ambient	83.3	°C/W
$R_{\theta JC}$	Thermal Resistance from Junction to Case	8.3	°C/W

Electrical Characteristics At Specified Virtual Junction Temperature

(Vi=16V,Io=500mA, Ci=0.33μF,Co=0.1μF,unless otherwise specified)

Symbol	Parameter	Test conditions		Min	Typ	Max	Unit
Vo	Output Voltage		25°C	8.65	9	9.35	V
		11.5V≤ Vi ≤24V,I_O=5mA-1A,P≤15W	0-125°C	8.55	9	9.45	V
ΔVo	Load Regulation	I_O=5mA - 1.5A	25°C		12	180	mV
		I_O=250mA - 750mA	25°C		4	90	mV
ΔVo	Line Regulation	11.5V≤ Vi ≤27V	25°C		7	180	mV
		13V≤ Vi ≤19V	25°C		2	90	mV
Iq	Quiescent Current		25°C		4.3	8	mA
ΔIq	Quiescent Current Change	11.5V≤ Vi ≤27V	0-125°C			1	mA
ΔIq		5 mA≤I_O≤1A	0-125°C			0.5	mA
$\Delta V_O/\Delta T$	Output Voltage Drift	I_O=5Ma	0-125°C		-1		mV/°C
VN	Output Noise Voltage	f =10Hz to 100KHz	25°C		60		μV
RR	Ripple Rejection	f =120Hz,12V≤ V_i ≤22V	0-125°C	55	70		dB
Vd	Dropout Voltage	I_O=1.0A	25°C		2		V
R_O	Output Resistance	f = 1KHz	25°C		18		mΩ
Isc	Short Circuit Current		25°C		400		mA
Ipk	Peak Current		25°C		2.2		A

Typical Application

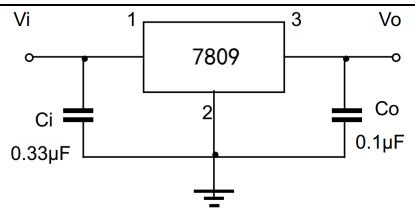

Typical Characteristics

Output Characteristics

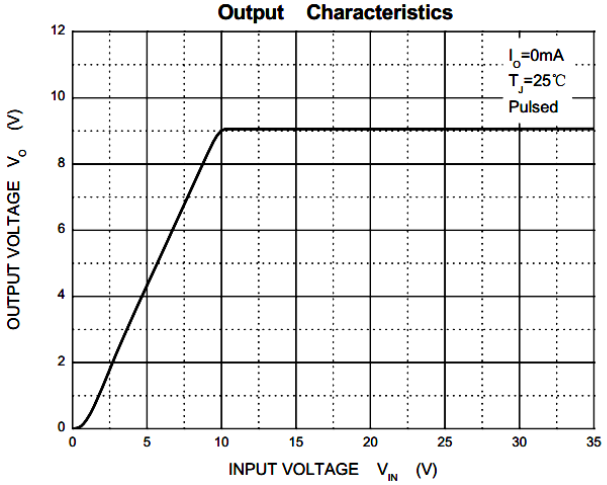

Dropout Characteristics

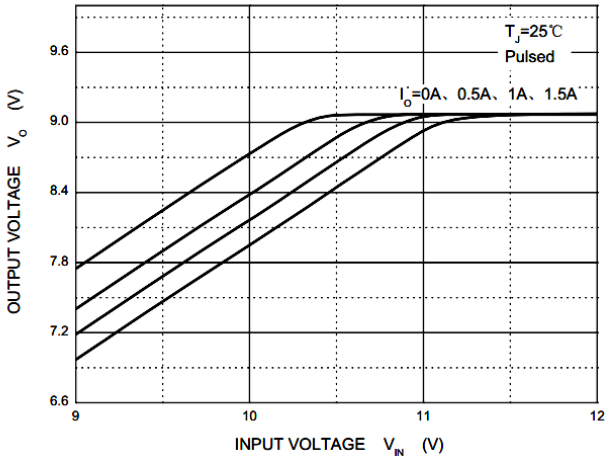

Quiescent Current

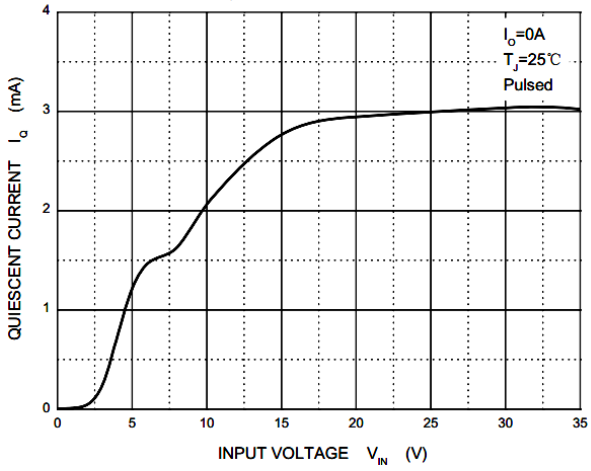

Quiescent Current vs Output Current

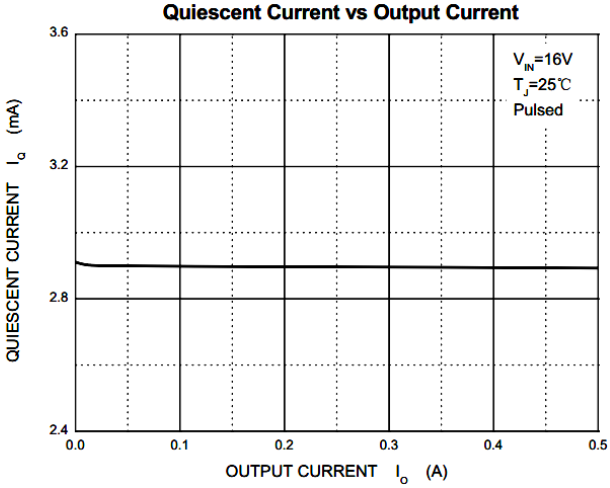

Output Voltage vs Ambient Temperature

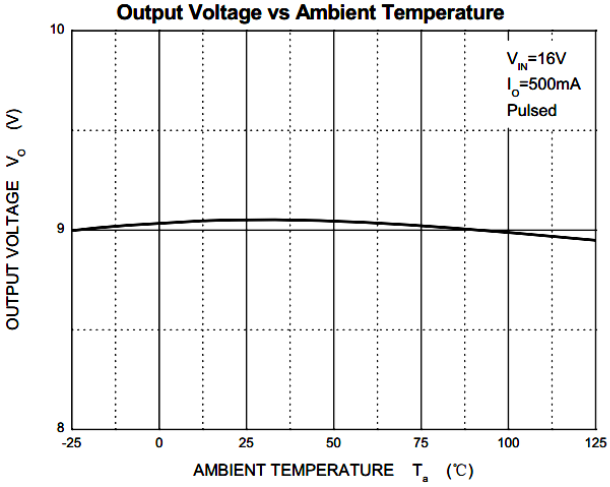

Current Cut-off Grid Voltage

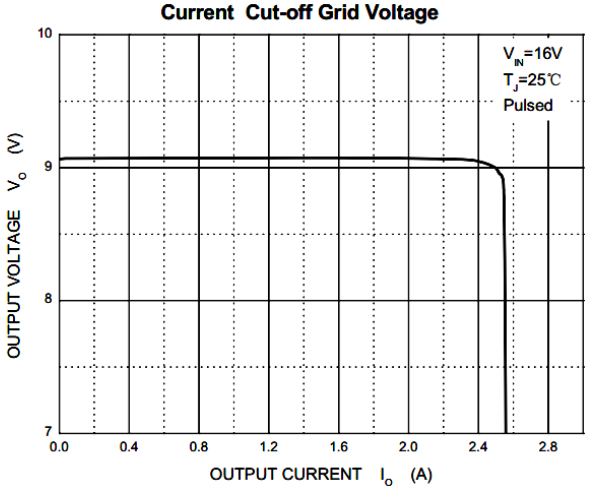

Power Derating Curve